SECTION K

FOUR (4) CORE ENCLOSED SPIRAL HT-200

HT-200

HT-200
Enclosed
Spiral Separator

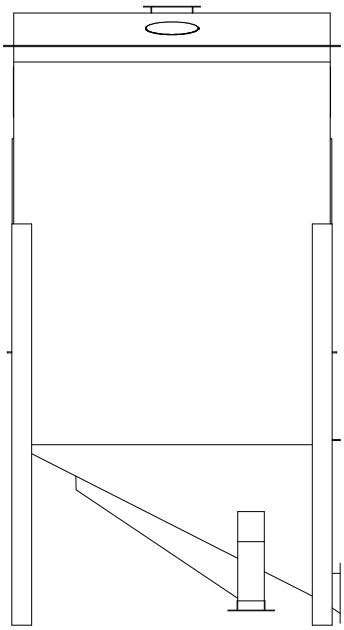

Completely Enclosed For

- **Dust Control**
- **Quiet Operation**
- **Compactness**
- **Ease of Handling**

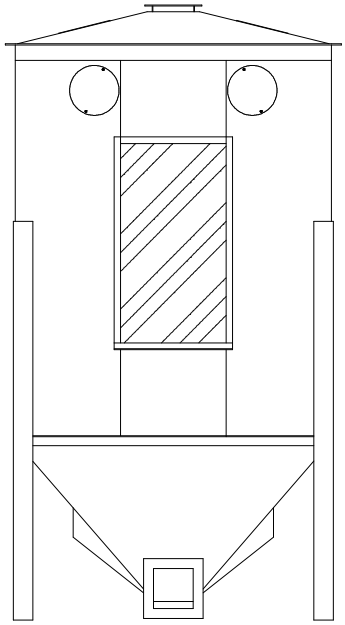

HT-200

⇒ High Capacity 200 BPH

- Each unit contains (4) independent soldered, galvanized Spiral Core Cartridges with each having infinitely adjustable flow-control (flow control adjustable during operation)
- Integral self-cleaning hoppers
- Deflectors included for fine tuning separation
- Two (2) access doors for easy entrance to internal components
- Heavy 14 gauge body construction with rubber cushioned seed discharge points
- Legs 3/16” Flanges 1/8”
- Different pitched spiral cores offered which are easily installed

(these cores can be furnished in Galvanized metal up to 22 gauge & 24 guage Stainless)

⇒ Figure based on average precleaned soybean seed but may vary depending on precleaning quality, type seed, or required quality of final product.

BASIC HT-200 BOX TYPE SPIRAL SEPARATOR (MATERIAL PATH)

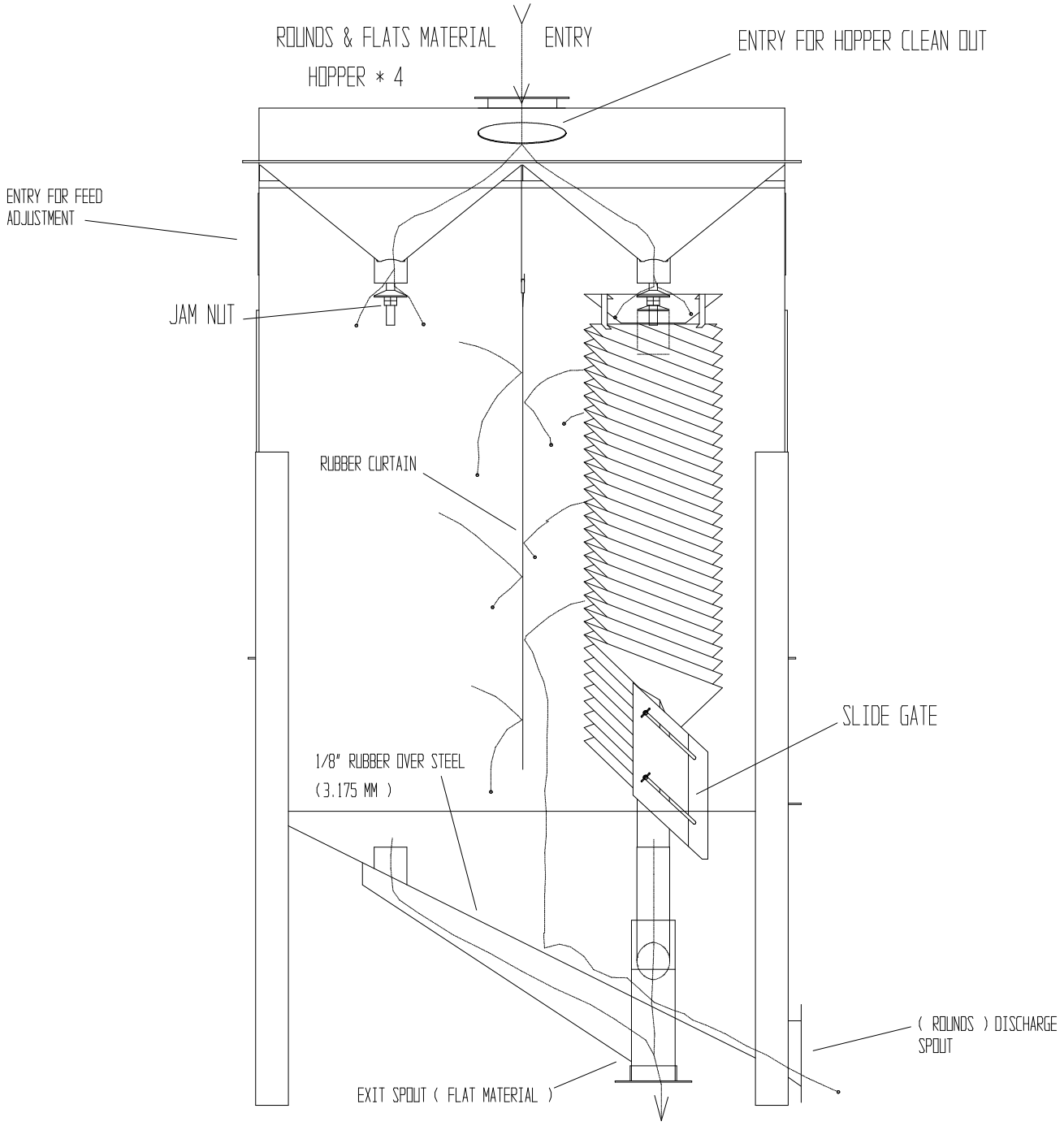

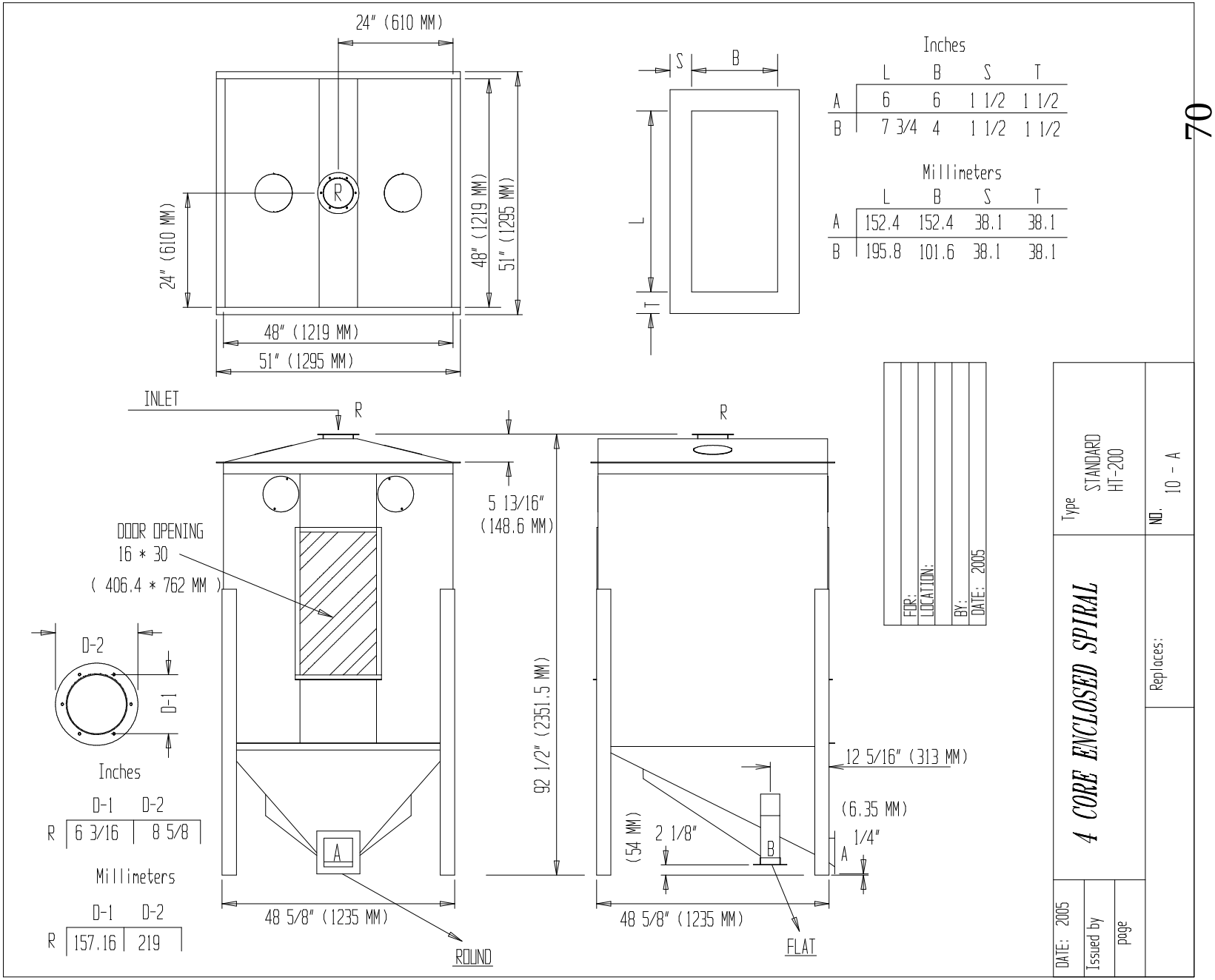

Inches

	L	B	S	T
A	6	6	1 1/2	1 1/2
B	7 3/4	4	1 1/2	1 1/2

Millimeters

	L	B	S	T
A	152.4	152.4	38.1	38.1
B	195.8	101.6	38.1	38.1

Inches

	D-1	D-2
R	6 3/16	8 5/8

Millimeters

	D-1	D-2
R	157.16	219

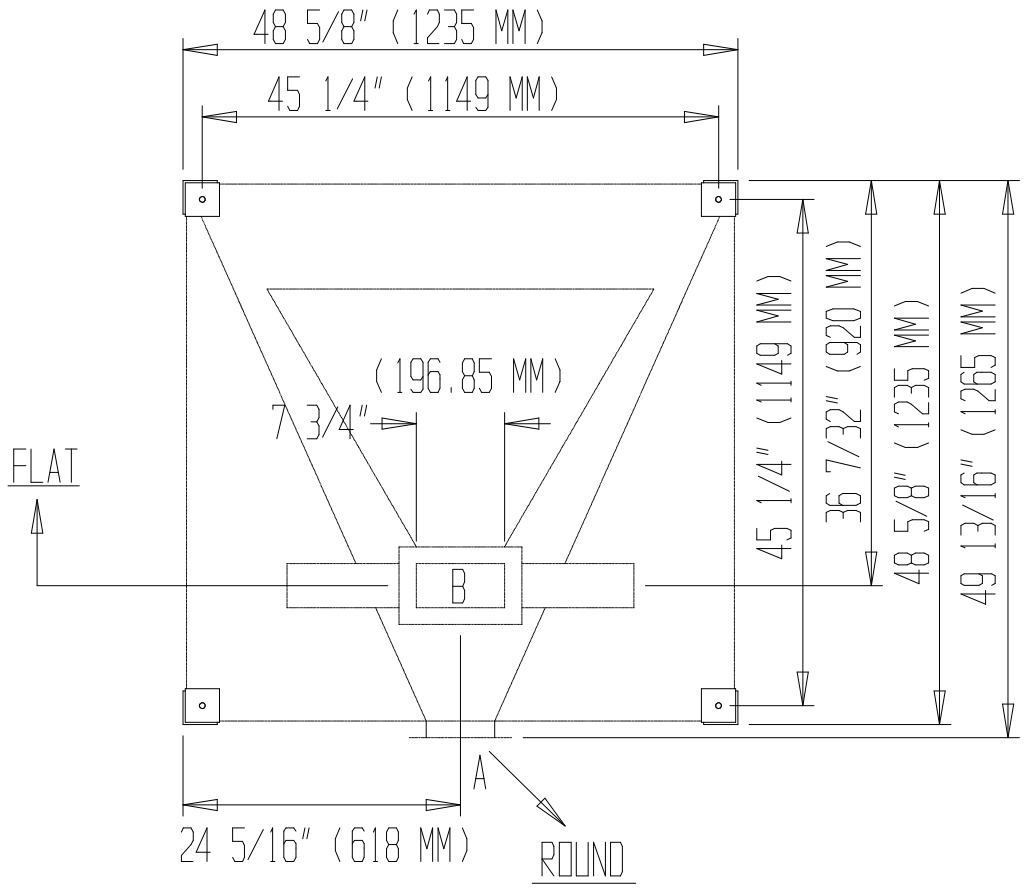

TOP - FRONT - SIDE (10 - A)

			HT-200	LOW PROFILE 10 - B
			4 CORE ENCLOSED SPIRAL	
			FOOT PRINT DRAWING	DATE: 2005